ECCO Electronics Technology Co.,ltd

75W DC-DC converter(1/2 brick)

Typical Performance

FEATURES

- Wide Input voltage range (2:1/4:1)
- Typical Efficiency:85%
- Switching frequency：300KHz
- Output Over current protect,Short circuit protection
- input under voltage protection
- input-output isolated
- PCB Board in-line type installs
- High reliability
- Optional heat sink

3-Years Product Warranty

Technology parameter Test condition:General Nominal Line,Tc=25℃， Rated resistant load unless other wisespecified

Input Features	*Min*	*Nom*	*Max*	*Notes*
	Test condition			
Start voltage	24V(18~36Vin)			18V
	48V(36~72Vin)			36V
	110V(72~144Vin)			72V
	18V(9~36V)			10V
Input under voltage protection	24V(18~36Vin)			17V
	48V(36~72Vin)			35V
	110V(72~144Vin)			71V
	18V(9~36V)			8V
Input voltage（Vdc）	9	12	18	W 2:1
	18	24	36	W 2:1
	36	48	72	W 2:1
	72	110	144	W 2:1
	9	18	36	W 4：1

	18	36	72	W 4：1
Start time	Not capacitive load			20mS
Remote On/Off Function				
CTL	CNT Pin connect -Vin			OFF
	CNT Pin left open			ON
Output Feature				
	Test condition			
Voltage accuracy	Io=0.1...1.0xIonom,Vi=Vrated			±1.0%
Line regulation	Vimin≤Vi≤Vimax			±0.2%
Load regulation	Io=0.1...1.0xIonom,Vimin≤Vi≤Vimax,,Vi=Vrated			±0.5%
Ripple&noise	2-MHz Broadband			1%
Over current protection	Vimin≤Vi≤Vimax			120%
Peak Deviation	25% Rated Load Vary			±5.0%
Dynamic Response Setting Time				400us
Output Voltage Trim	Vimin≤Vi≤Vimax			10%
Switching frequency	Vimin≤Vi≤Vimax			300KHz
General Feature				
	Test condition			
Efficiency				85% typical
Board temperature	Industry level			-25℃ ~ +55℃
Working environment temperature	Military level			-25℃ ~ +85℃
Max Board temperature	Industry level			+85℃
	Military level			+105℃
Storage temperature	Industry level			-40℃ ~ +105℃
	Military level			-50℃ ~ +105℃
Relative humidity	No condensation			5%~90%RH
Temperature coefficient				±0.02%/℃
case material				aluminium baseplate
Isolated resistance	Input-Output			100M ohm

Vibration resistance	10~55Hz		5G
Over current mode	Full input range	Protection type : Hiccup mode, recovers automatically	
Cooling		Heatsink,nature cooling	
Case material		epoxy,Aluminum base plate	
Isolated Voltage	Input-output 1500Vdc; input-FG 1500Vdc,Output-FG 500Vdc		
MTBF	MIL-HDBK-217F2		$5X10^6$Hrs

Product Nomination Method

example	L D 200 – Q 48 S 12 ① ② ③ ④ ⑤ ⑥ ⑦		
①	Wide input voltage：2：1	④	G:1/2 brick package
②	Power adaptation mode：D（DC-DC）	⑤	Normal input voltage
③	Output power(W)	⑥	S=Single route output
⑦	output voltage		

Product Program

PART #	Input voltage range	Output voltage / current					
		VO1		VO2		VO3	
		V	A	V	A	V	A
LD75Q-12S3V3	12V(9~18V)	3.3V	22.7A				
LD75Q-12S05		5V	15A				
LD75Q-12S12		12V	6.25A				
LD75Q-12S15		15V	5A				
LD75Q-12S18		18V	4.2				
LD75Q-12S24		24V	3.125A				
LD75Q-12S28		28V	2.6A				
LD75Q-12S36		36V	2A				
LD75Q-12S48		48V	1.5A				
LD75Q-18S3V3	18V(9-36V)	3.3V	22.7A				
LD75Q-18S05		5V	15A				
LD75Q-18S12		12V	6.25A				
LD75Q-18S15		15V	5A				
LD75Q-18S24		24V	3.125A				

LD75Q-18S28		28V	2.6A				
LD75Q-12S48		48V	1.5A				
LD75Q-24S3V3	24 V(18~36V)	3.3V	22.7A				
LD75Q-24S05		5V	15A				
LD75Q-24S09		9V	8.3A				
LD75Q-24S12		12V	6.25A				
LD75Q-24S15		15V	5A				
LD75Q-24S18		18V	4.2A				
LD75Q-24S18V5		18.5V	4.05A				
LD75Q-24S19		19V	3.95A				
LD75Q-24S24		24V	3.125A				
LD75Q-24S28		28V	2.6A				
LD75Q-24S36		36V	2A				
LD75Q-24S48		48V	1.5A				
LD75Q-48S3V3	48 V(36~72V)	3.3V	22.7A				
LD75Q-48S05		5V	15A				
LD75Q-48S12		12V	6.25A				
LD75Q-48S15		15V	5A				
LD75Q-48S18		18V	4.2A				
LD75Q-48S24		24V	3.125A				
LD75Q-48S28		28V	2.6A				
LD751-48S36		36V	2A				
LD75Q-48S48		48V	1.5A				
LD75Q-36S05	36V(18~72V)	5V	15A				
LD75Q-36S12		12V	6.25A				
LD75Q-36S15		15V	5A				
LD75Q-36S24		24V	3.125A				
LD75Q-36S28		28V	2.6A				
LD75Q-36S48		48V	1.5A				
LD75Q-110S3V3	110V(72~144V)	3.3V	22.7A				
LD75Q-110S05		5V	15A				
LD75Q-110S12		12V	6.25A				

LD75Q-110S15		15V	5A				
LD75Q-110S18		18V	4.2A				
LD75Q-110S24		24V	3.125A				
LD75Q-110S28		28V	2.6A				
LD75Q-110S36		36V	2A				
LD75Q-110S48		48V	1.5A				

Recommended Circuit

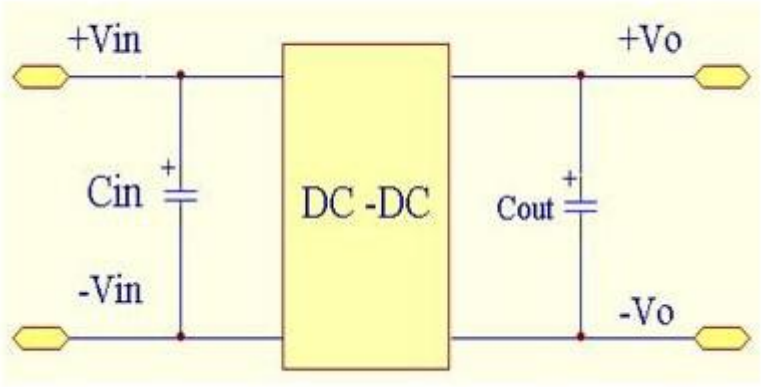

(1)Power module with Cin is helpful to improve the electromagnetic compatibility, it is recommended to use 47 μF~100μF electrolytic capacitor
(2)Power module with Cout is helpful to lower the output ripple
(3)Power module output connects the digital circuit needs to add Cout
(4)Cout is recommended to use 100μF/A, the current is refers to the output current

TRIM

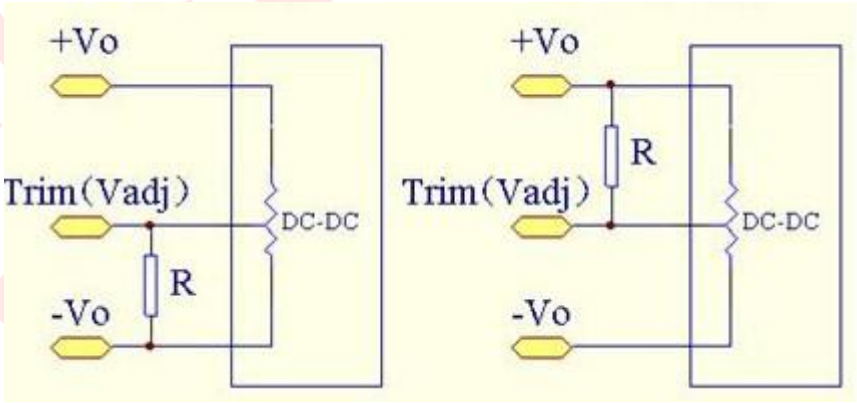

Raise output voltage **Low output voltage**

Input Voltage--Efficiency

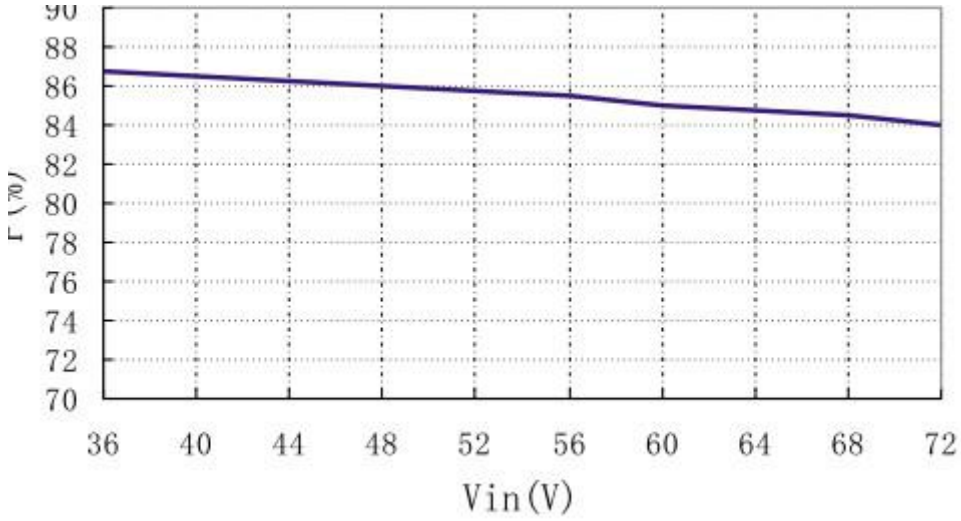

Output Load--Efficiency

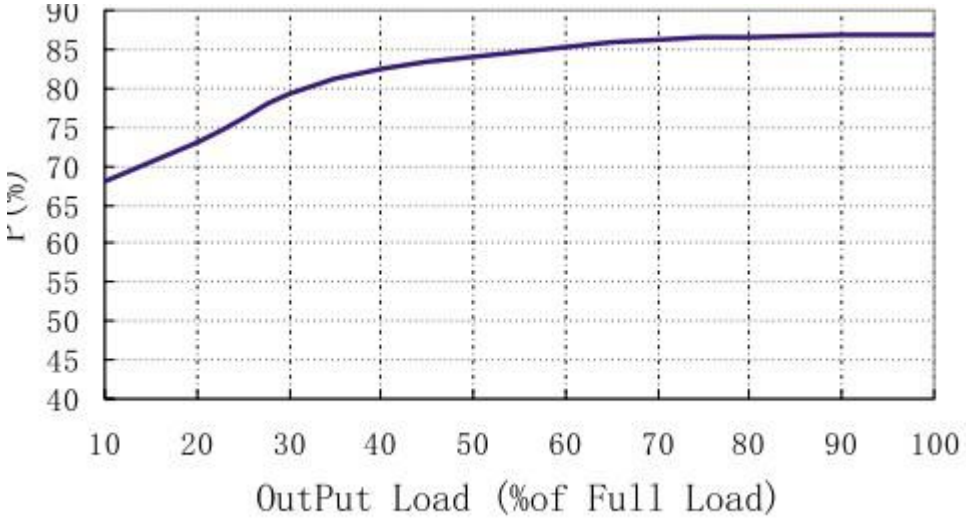

Temperature Curve

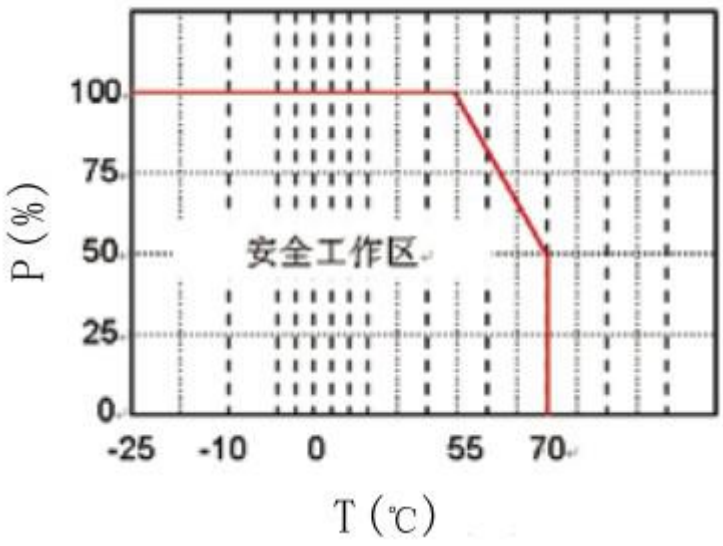

Mechanical Dimension

Unit:mm(inch)

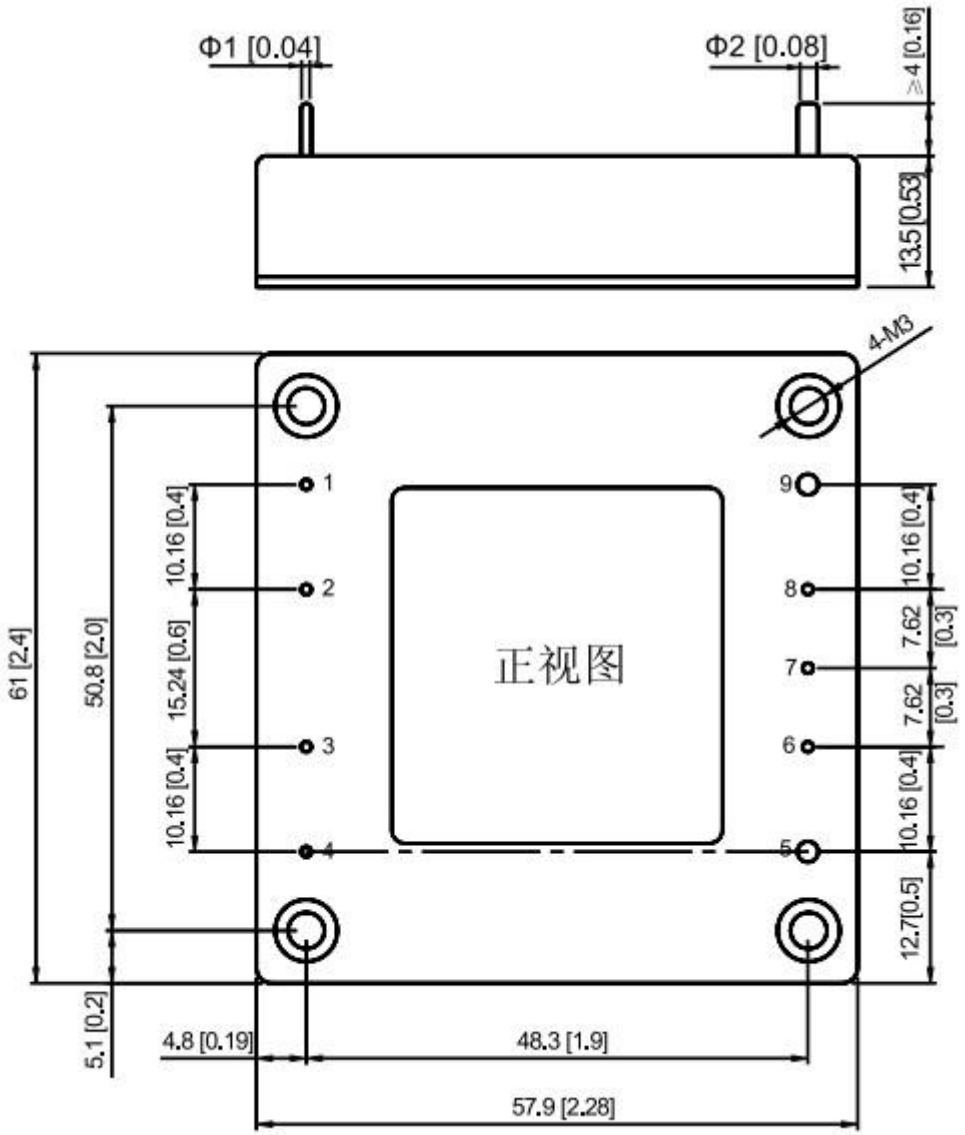

BOTTON VIEW

Unit:mm(inch)

Tolerance:±0.2mm(±0.008inch)

Mechanical Data

WATT	L x W x H	Packing No.
75W	57.90x 61.00 x 12.70mm	

Pin Assignment

Pin	1	2	3	4	5	6	7	8	9	
Single O/P	-Vin	CASE	CTL	+Vin	+Vout	+S	TRIM	-S	-Vout	

*Note： The power modules such as the definition of the pin does not match with the hand book,please refer to the actual item.